Multifunctional spring return actuator with emergency function for adjusting air dampers in ventilation and air conditioning systems in buildings

- **For air dampers up to approx. 2 m²**
- **Torque 10 Nm**
- **Nominal voltage AC/DC 24 V**
- **Control: modulating DC 0 ... 10 V or variable**
- **Position feedback DC 0 ... 10 V or variable**

Technical data

Electrical data				
Nominal voltage		AC 24 V, 50/60 Hz / DC 24 V		
Nominal voltage range		AC 19.2 ... 28.8 V / DC 21.6 ... 28.8 V		
Power consumption	In operation	7 W @ nominal torque		
	At rest	3.5 W		
	For wire sizing	9.5 VA		
Connection		Cable 1 m, 4 x 0.75 mm²		
Parallel operation		Yes		
Functional data		**Factory settings**	**Variable**	**Setting**
Torque (nominal torque)	Motor	Min. 10 Nm @ nominal voltage		
	Spring return	Min. 10 Nm		
Control	Control signal Y	DC 0 … 10 V, input impedance 100 kΩ	Open-close, 3-point (only AC), modulating (DC 0 ... 32 V)	.....
	Operating range	DC 0.5 ... 10 V	Start point DC 0.5 ... 30 V End point DC 2.5 ... 32 V	.....
Position feedback (measuring voltage U)		DC 0.5 ... 10 V, max. 0.5 mA	Start point DC 0.5 ... 8 V End point DC 2.5 ... 10 V	.....
Position accuracy		±5%		
Direction of rotation	Motor	Reversible with switch ↷ / ↶		
	Spring return	By mounting		
Direction of rotation Y = 0 V		At switch position 1 ↷ resp. 0 ↶	Electronically reversible	.....
Manual override		With hand crank and interlocking switch		
Angle of rotation		Max. 95°∢, adjustable from 33% in 5% steps (with enclosed angle of rotation limiter)		
Running time	Motor	≤150 s / 90°∢	40 ... 150 s	.....
	Spring return	≤20 s @ –20 ... 50°C / max. 60 s @ –30°C		
Automatic adjustment of running time, operating range and measuring signal U to match the mechanical angle of rotation		Manual triggering of the adaption by pressing the «Adaption» button	Automatic adaption whenever the supply voltage is switched on, or manual triggering	.....
Override control		MAX (maximum position) = 100% MIN (minimum position) = 0% ZS (intermediate position, only AC) = 50%	MAX = (MIN + 32%) ...100% MIN = 0% ... (MAX – 32%) ZS = MIN ... MAX	.....
Sound power level	Motor	≤40 dB (A) @ 150 s running time		
	Spring return	≤62 dB (A)		
Service life		Min. 60,000 emergency positions		
Position indication		Mechanical		
Safety				
Protection class		**III** Extra low voltage		
Degree of protection		IP54		
EMC		CE according to 2004/108/EC		
Certification		Certified to IEC/EN 60730-1 and IEC/EN 60730-2-14		
Mode of operation		Type 1.AA		
Rated impulse voltage		0.8 kV		
Control pollution degree		3		

Technical data *(Continued)*

Safety	
Ambient temperature	–30 ... +50°C
Non-operating temperature	–40 ... +80°C
Ambient humidity	95% r.h., non-condensating
Maintenance	Maintenance-free
Dimensions / Weight	
Dimensions	See «Dimensions» on page 5
Weight	Approx. 2.0 kg

Safety notes

- **The actuator is not allowed to be used outside the specified field of application, especially in aircraft or in any other airborne means of transport.**
- **It may only be installed by suitably trained personnel. Any legal regulations or regulations issued by authorities must be observed during assembly.**
- **The device may only be opened at the manufacturer's site. It does not contain any parts that can be replaced or repaired by the user.**
- **The cable must not be removed from the device.**
- **The device contains electrical and electronic components and is not allowed to be disposed of as household refuse. All locally valid regulations and requirements must be observed.**

Product features

Mode of operation
The actuator moves the damper actuator to the operating position at the same time as tensioning the return spring. The damper is turned back to the emergency position by spring force if the supply voltage is interrupted.
The actuator is controlled with a standard modulating signal of DC 0 ... 10 V and travels to the position defined by the control signal. Measuring voltage U serves for the electrical display of the damper position 0 ... 100% and as slave control signal for other actuators.

Parameterisable actuators
The factory settings cover the most common applications. Input and output signals and other parameters can be altered with the BELIMO Service tool MFT-P or the adjustment and diagnostic tool ZTH-GEN

Simple direct mounting
Simple direct mounting on the damper spindle with a universal spindle clamp, supplied with an anti-rotation strap to prevent the actuator from rotating.

High operational reliability
The actuator is overload-proof, requires no limit switches and automatically stops when the end stop is reached.

Home position
When the supply voltage is switched on, the actuator automatically detects its emergency position (zero initialisation). This process, which takes place with the actuator stationary, lasts <15 s.

Accessories

	Description	Data sheet
Electrical accessories	BELIMO Service tool MFT-P	
	Adjustment and diagnostic tool ZTH-GEN	
	Auxiliary switch S2A-F	
	Position positioner SGA24, SGE24 and SGF24	T2 - SG..24
	Digital position indication ZAD24	T2 - ZAD24
	Room temperature controller CR24..	S4 - CR24-..
Mechanical accessories	Various accessories (clamps, shaft extensions)	

Electrical installation

Wiring diagram

Notes
- Connect via safety isolation transformer.
- Other actuators can be connected in parallel. Note performance data for supply.

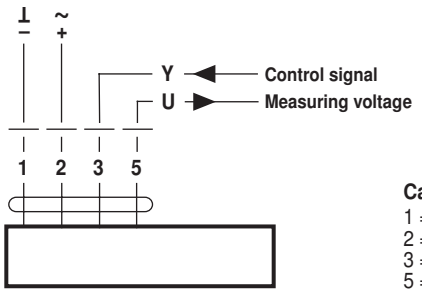

Cable colours:
1 = black
2 = red
3 = white
5 = orange

Functions with basic values

Override control with AC 24 V with relay contacts

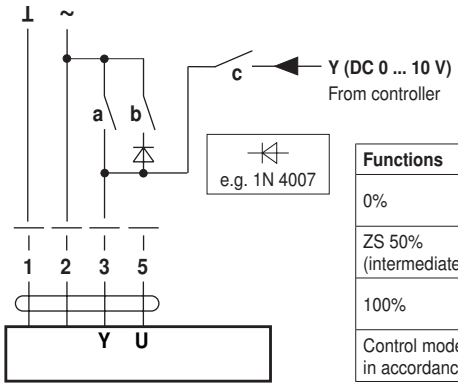

Functions	a	b	c
0%	⁄	⁄	⁄
ZS 50% (intermediate position)	⁄	⊥	⁄
100%	⊥	⁄	⁄
Control mode in accordance with Y	⁄	⁄	⊥

Remote control 0 ... 100 %

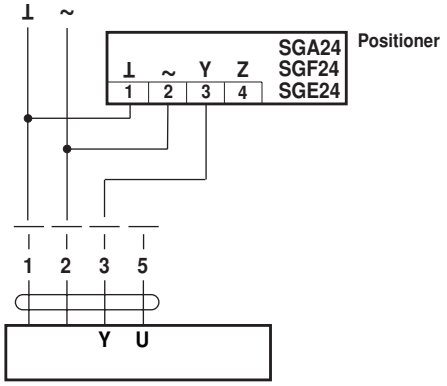

Minimum limit

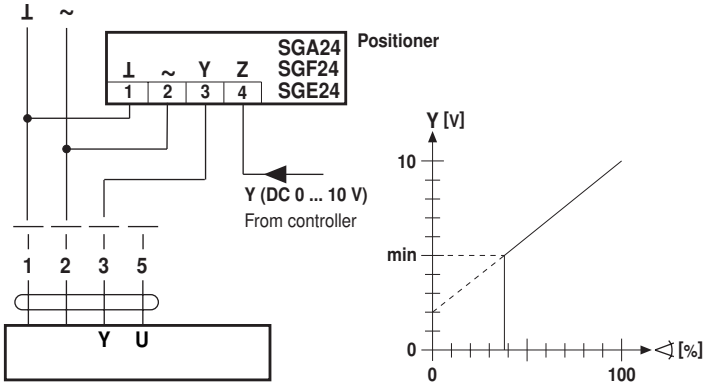

Master/Slave control (position-dependent)

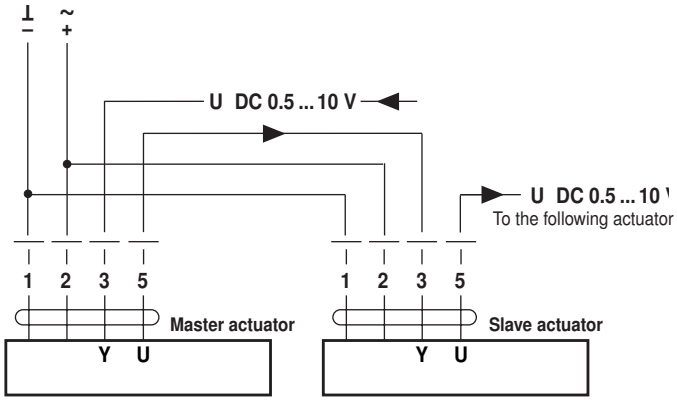

Control with 4 ... 20 mA via external resistance

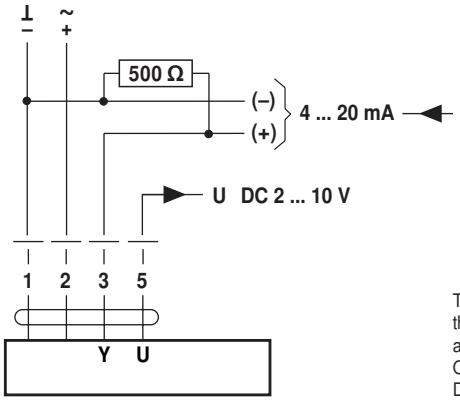

The 500 Ω-resistor converts the 4 ... 20 mA current signal to a voltage signal DC 2 ... 10 V. Operating range adjusted on DC 2...10 V

Position indication

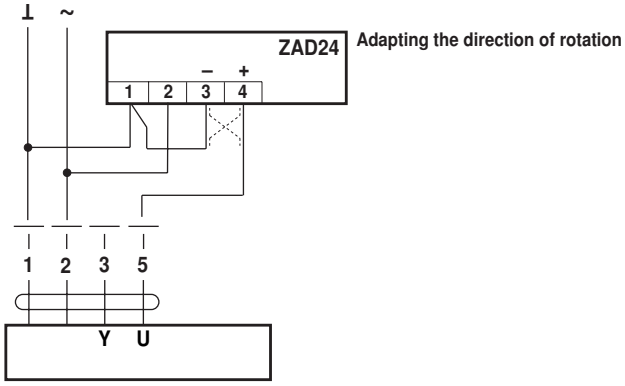

Functional check

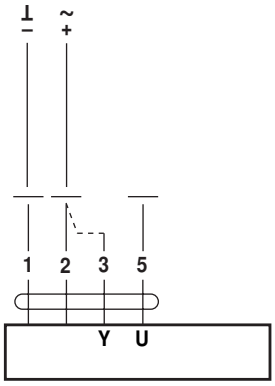

Procedure

- Apply 24 V to connection 1 and 2
- Disconnect connection 3:
  - For direction of rotation 0: Actuator turns in the direction of ↺
  - For direction of rotation 1: Actuator turns in the direction of ↻
- Short circuit connections 2 and 3:
  - Actuator runs in the opposite direction

Functions for actuators with specific parameters

Override control and limiting with AC 24 V with relay contacts

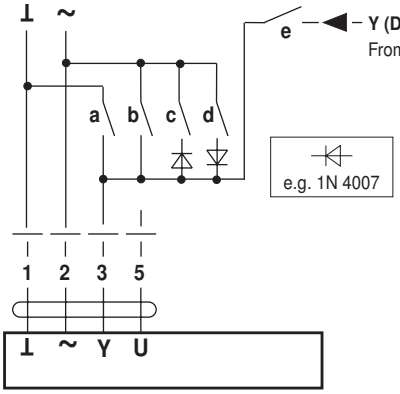

Functions	a	b	c	d	e
CLOSE [1]	⊥	–	–	–	–
MIN	–	–	–	–	–
ZS (intermediate position)	–	–	⊥	–	–
MAX	–	⊥	–	–	–
OPEN	–	–	–	⊥	–
Control mode in accordance with Y	–	–	–	–	⊥

Override control and limiting with AC 24 V with rotary switch

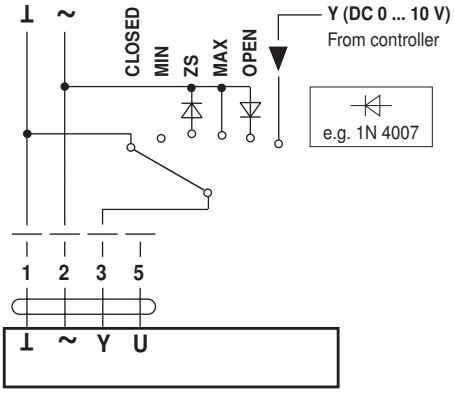

3-point control

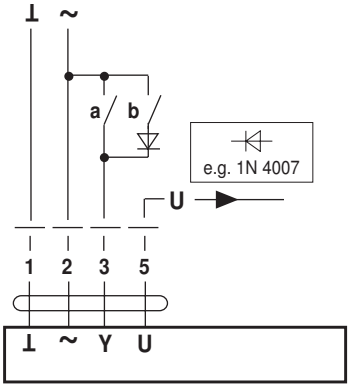

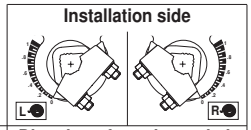

a (Y1)	b (Y2)	Direction of rotation switch R	L	R	L
⊥	–	↺	↻	↻	↺
–	–	Stop	Stop	Stop	Stop
–	⊥	↻	↺	↺	↻
⊥	⊥	↺	↻	↻	↺

Open-close control

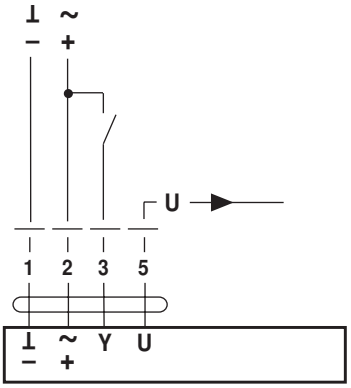

Operating controls and indicators

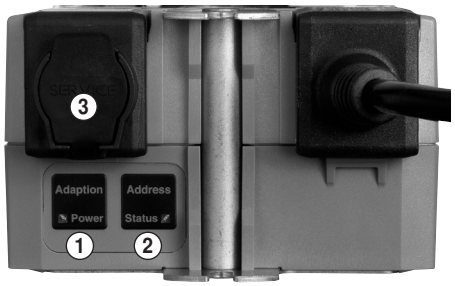

① **Pushbutton and green LED display**

Off:	No voltage supply or malfunction
On:	Operation
Press button:	Switches on angle of rotation adaption followed by standard operation

② **Pushbutton and yellow LED display**

Off:	Standard operation
On:	Adaption or synchronising process active
Press button:	No function

③ **Service plug**

For connecting parameterising and service tools

Check voltage supply connection

a) ① Off and ② On
b) ① Blinking and ② Blinking

} Check the supply connections. Possibly ⏚ and ⏚ are swapped over.

Operating controls The hand crank, interlocking switch and direction of rotation switch are provided on both sides.

Dimensions [mm]

Dimensional drawings

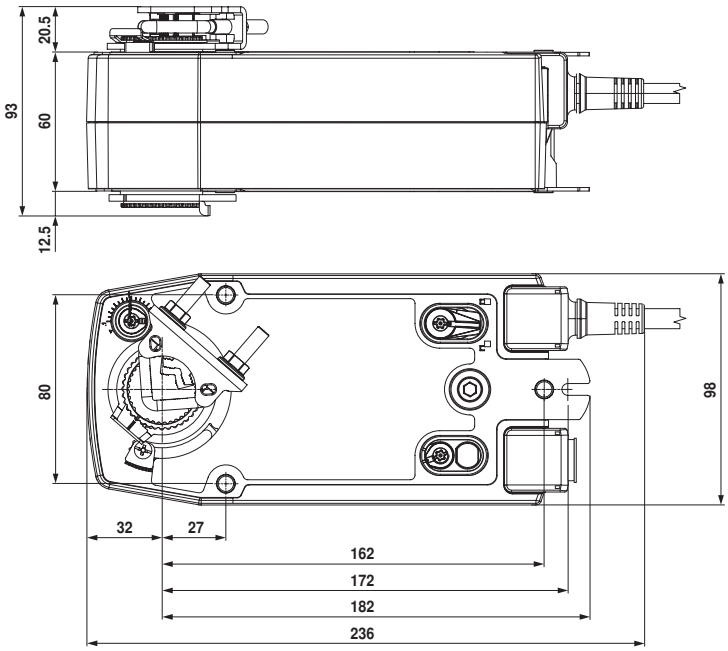

Variant 1a:
¾"-spindle clamp (with insertion part) EU Standard

Damper spindle	Length			
	≥85	10 ... 22	10	14 ... 25.4
	≥15			

Variant 1b:
1"-spindle clamp (without insertion part) EU Standard

Damper spindle	Length		
	≥85	19 ... 25.4 (26.7)	12 ... 18
	≥15		

Variant 2:
½"-spindle clamp (optional via configuration)

Damper spindle	Length		
	≥85	10 ... 19	14 ... 20
	≥15		

71127-00002.E

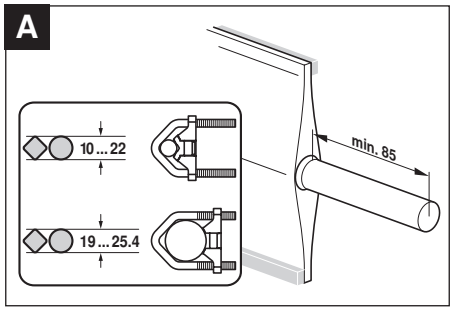

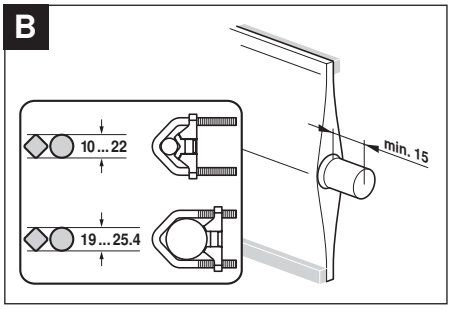

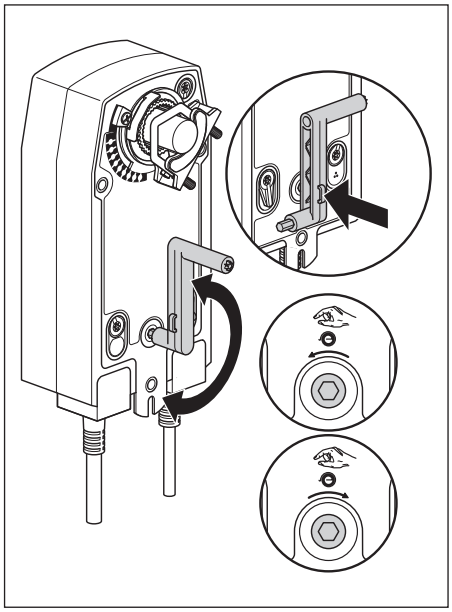

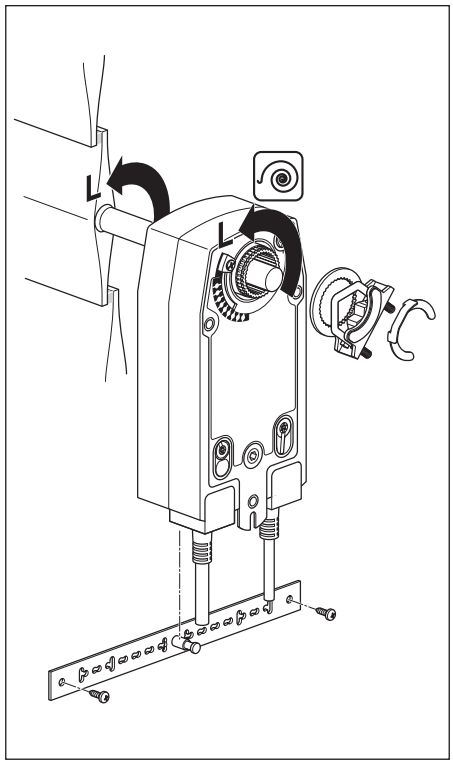

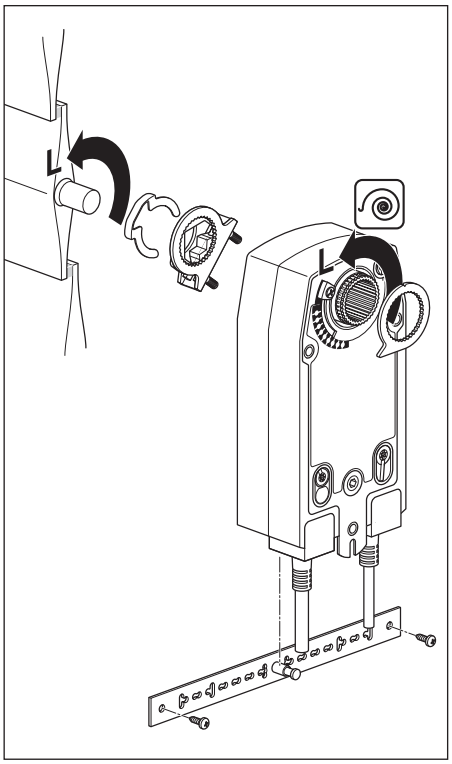

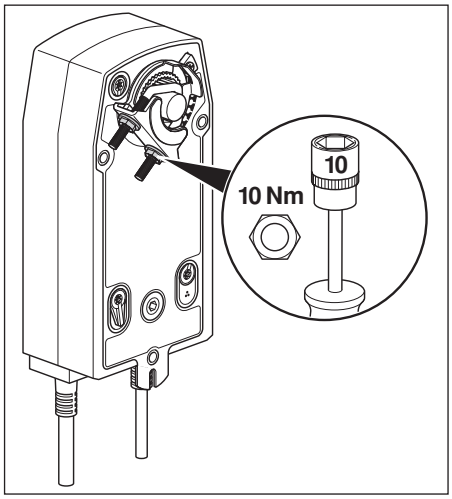

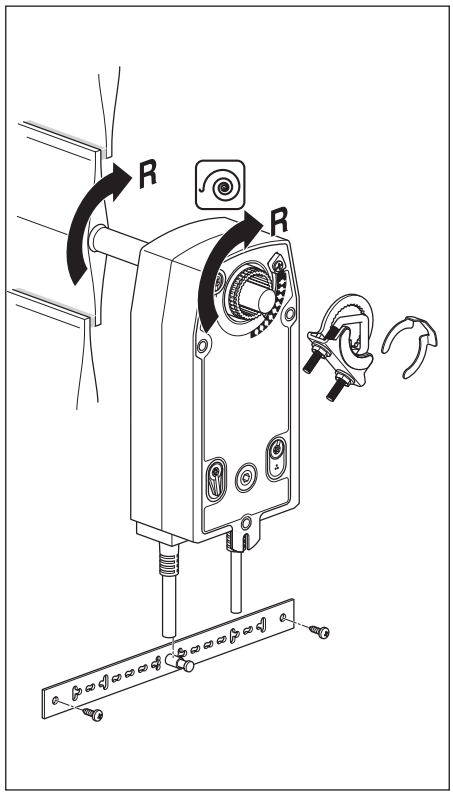

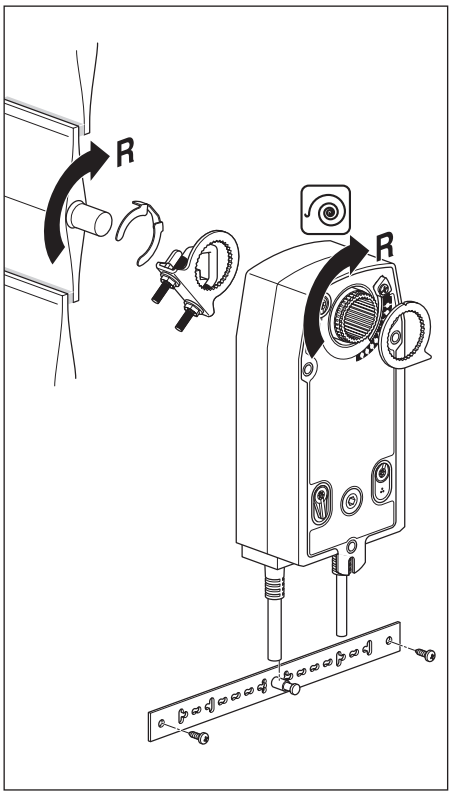

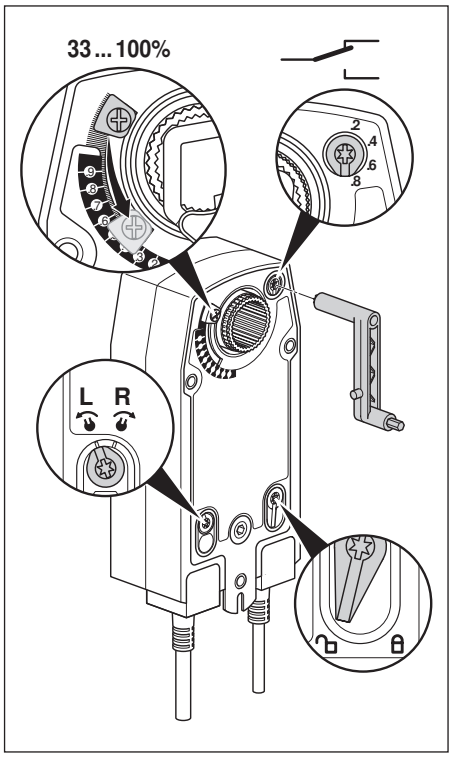

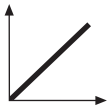

AC 24 V / DC 24 V

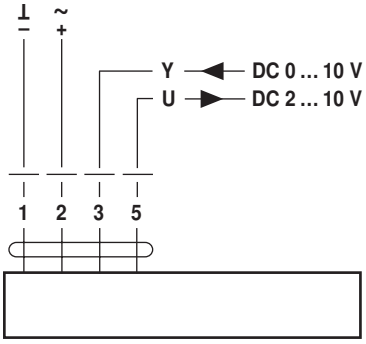

NF24A-SR
NF24A-MF
SF24A-SR
SF24A-MF

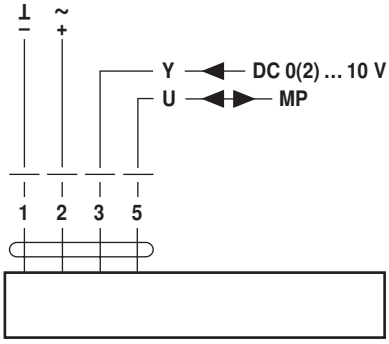

NF24A-MP
SF24A-MP

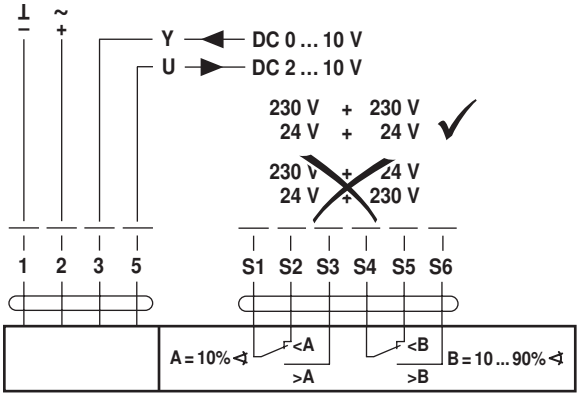

NF24A-SR-S2
SF24A-SR-S2

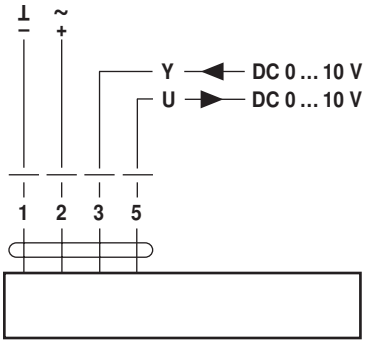

NF24A-SZ
SF24A-SZ

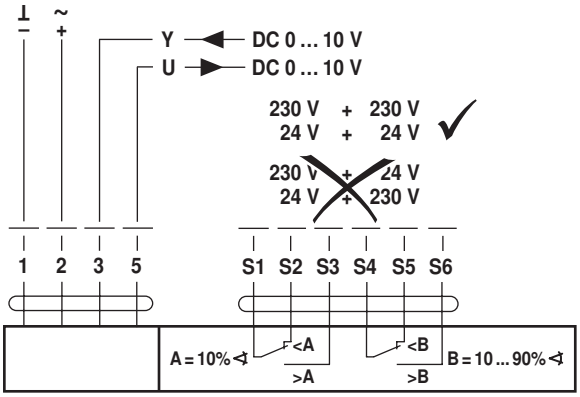

NF24A-SZ-S2
SF24A-SZ-S2

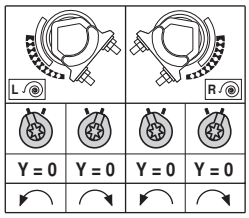

..F24A-SR
..F24A-SR-S2
..F24A-SZ
..F24A-SZ-S2