S+S REGELTECHNIK

Duct/air duct temperature sensors with passive output

Duct resistance thermometer THERMASGARD® KTF 1 with passive output, connecting head made of impact-resistant plastic, enclosure cover with quick-locking screws and plastic mounting flange. This duct sensor is particularly designed for temperature measurement in airflows and for the detection of temperatures in gaseous media, e.g. in ventilation and air conditioning ducts.

KTF 1

TECHNICAL DATA:

Measuring range: ..... -30...+150 °C
(T_{max} NTC = 150 °C, T_{max} LM235Z = 125 °C)

Sensors/output: ..... see table, passive
(optional also with two sensors)

Connection type: ..... 2-wire connection
(3- or 4-wire connection optional)

Testing current: ..... ca. 1 mA

Protective tube: ..... stainless steel, 1.4571, V4A,
Ø = 6 mm (optional perforated)

Connecting head: ..... plastic, material polyamide,
30 % glass-globe-reinforced,
with quick-locking screws,
colour pure white (similar RAL 9010),
ambient temperature -20/+100 °C

Dimensions: ..... 72 x 64 x 39.4 mm

Electrical connection: ..... 0.14 - 1.5 mm²
via terminal screws on circuit board

Cable gland: ..... M16, including strain relief

Process connection: ..... by mounting flange, plastic
(included in the scope of delivery)
(galvanised steel optional, see accessories)

Insulating resistance: ..... ≥ 100 MΩ, at 20 °C (500 V DC)

Humidity: ..... < 95 % r.H.

Protection class: ..... III (according to EN 60730)

Protection type: ..... **IP 65** (according to EN 60529)

Dimensional drawing **KTF 1**

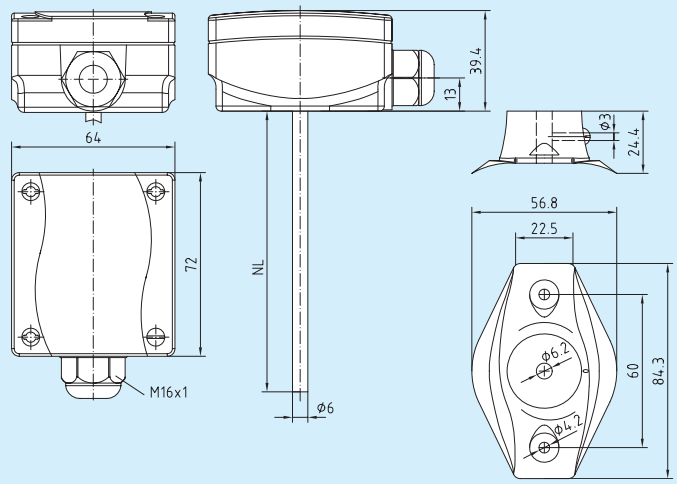

1x two-wire connection **standard**

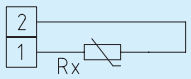

1x two-wire connection **LM 235 Z (KP 10)**

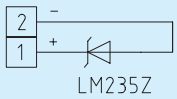

1x three-wire connection (optional)

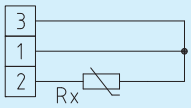

1x four-wire connection (optional)

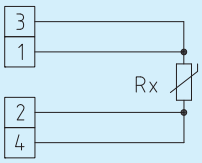

THERMASGARD® **KTF 1,** including mounting flange

Type/WG1 - Sensor/Output/NL	50 mm	100 mm	150 mm	200 mm	250 mm	300 mm	400 mm
KTF 1 Pt100	●	●	●	●	●	●	●
KTF 1 Pt1000	●	●	●	●	●	●	●
KTF 1 Ni1000	●	●	●	●	●	●	●
KTF 1 Ni1000 TK5000, LG-Ni1000	●	●	●	●	●	●	●
KTF 1 NTC 1.8 kOhm	●	●	●	●	●	●	●
KTF 1 KTY 81-210, NTC 10k, 20k, 30k, 50k, 10k Pre	●	●	●	●	●	●	●
KTF 1 LM235Z (TCR = 10 mV/K), KP10	●	●	●	●	●	●	●